IS DC RH04 IF S2 LAK - 1900991

Wymiary nadbudowy samochodowej - Dimensions of hardtop

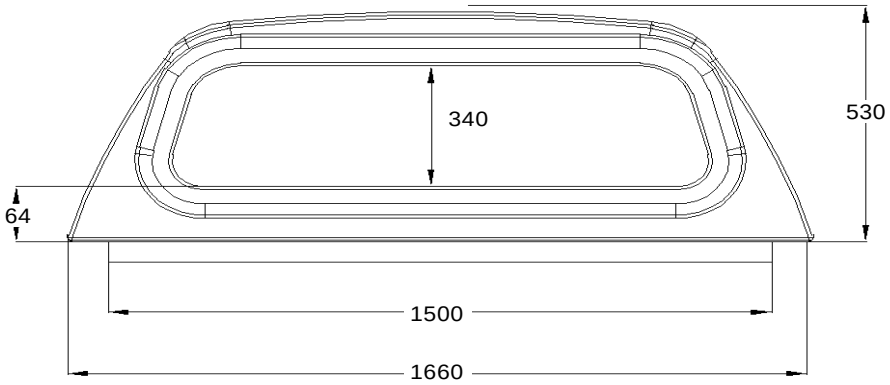

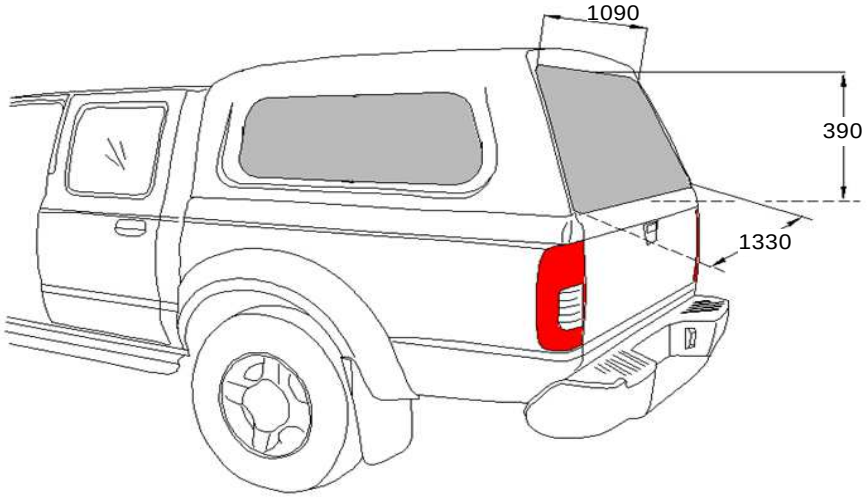

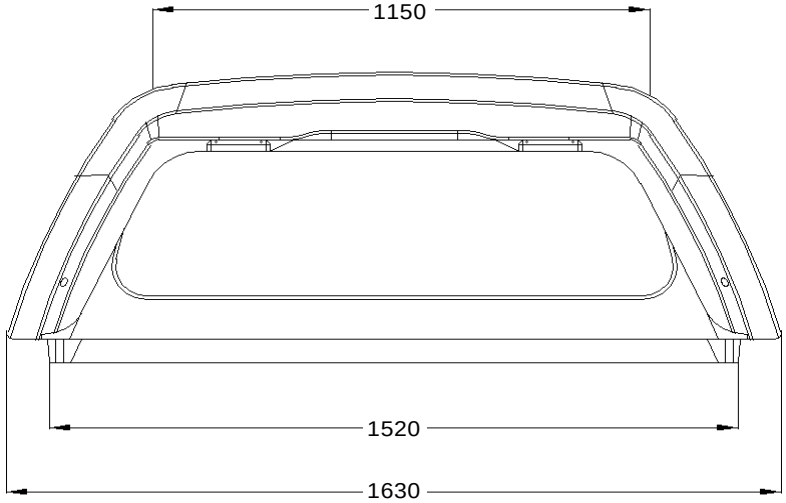

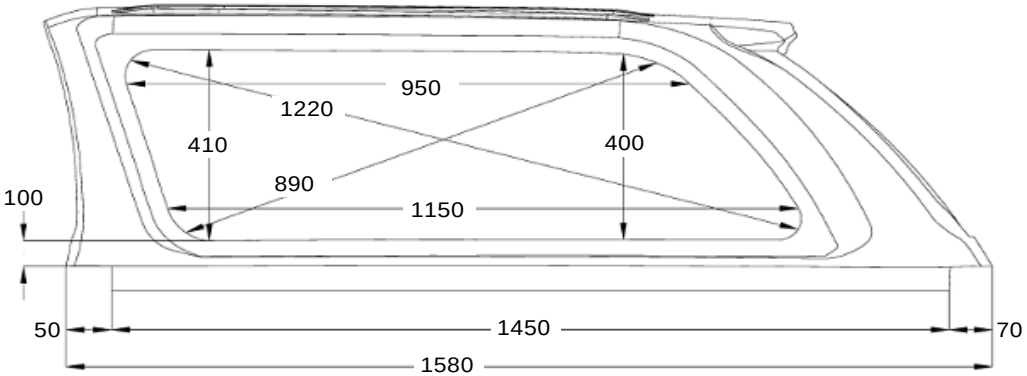

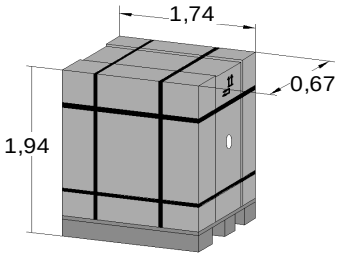

Net weight:	75,00	kg
Gross weight:	99,00	kg
Volume:	2,26	m3

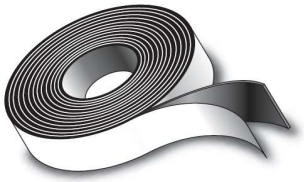

20 x 10 x 5000 GKS ECONOMY - 1,65 m
7 X 30 X 10000 A/60/PT3 PE-L - 3,3 m

RoadRanger © 2012